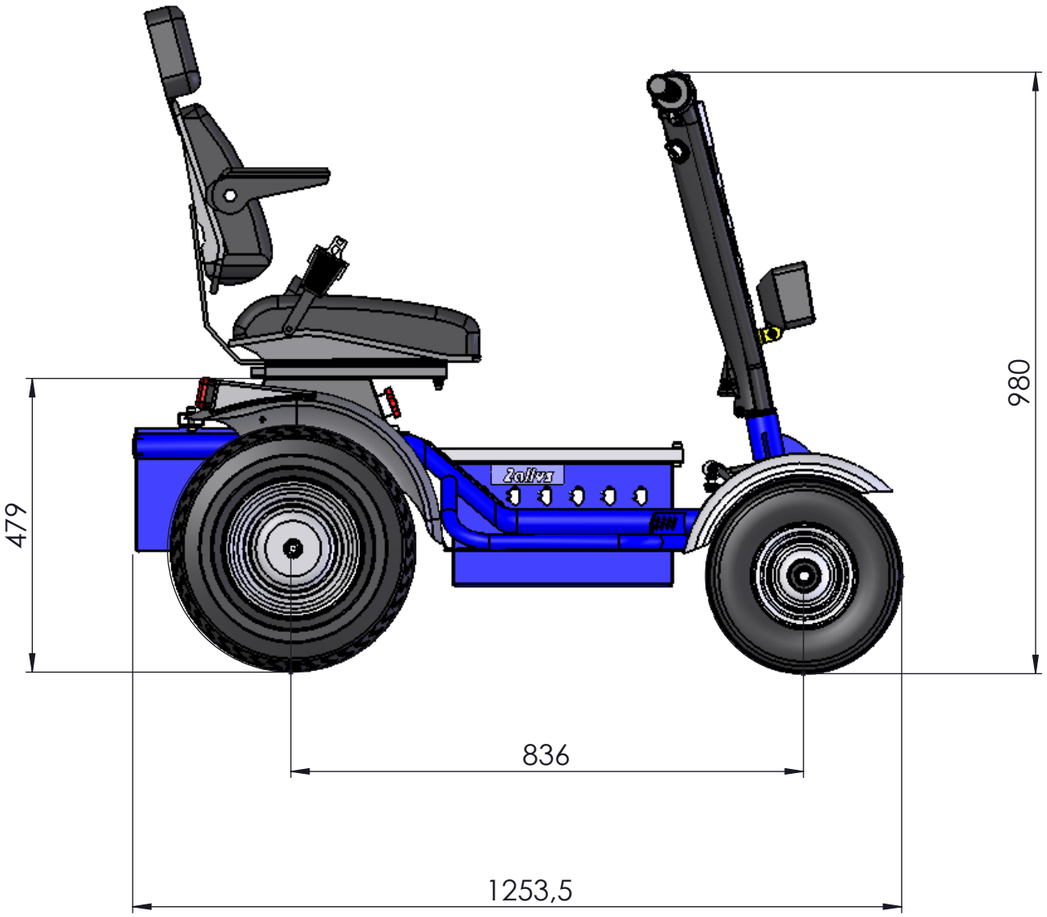

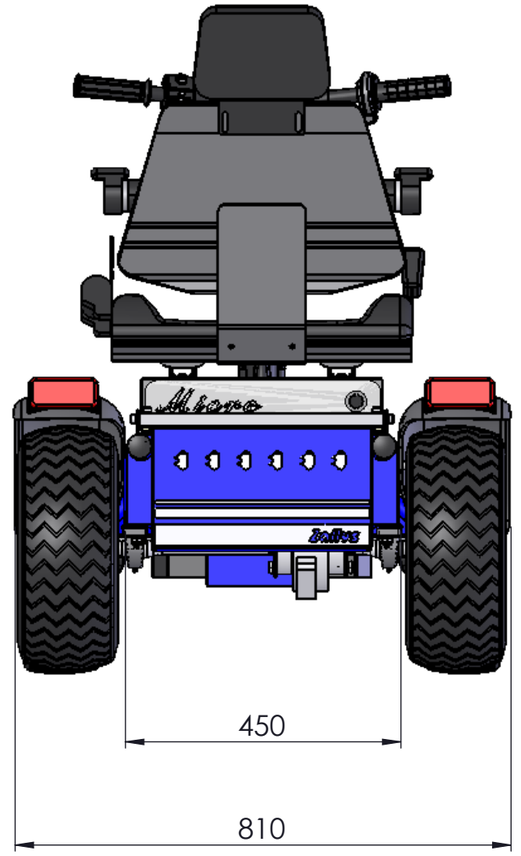

Zallys	TABLE: **Z106.700**	Micro	Scala 1:10